HULL DECK JOINT

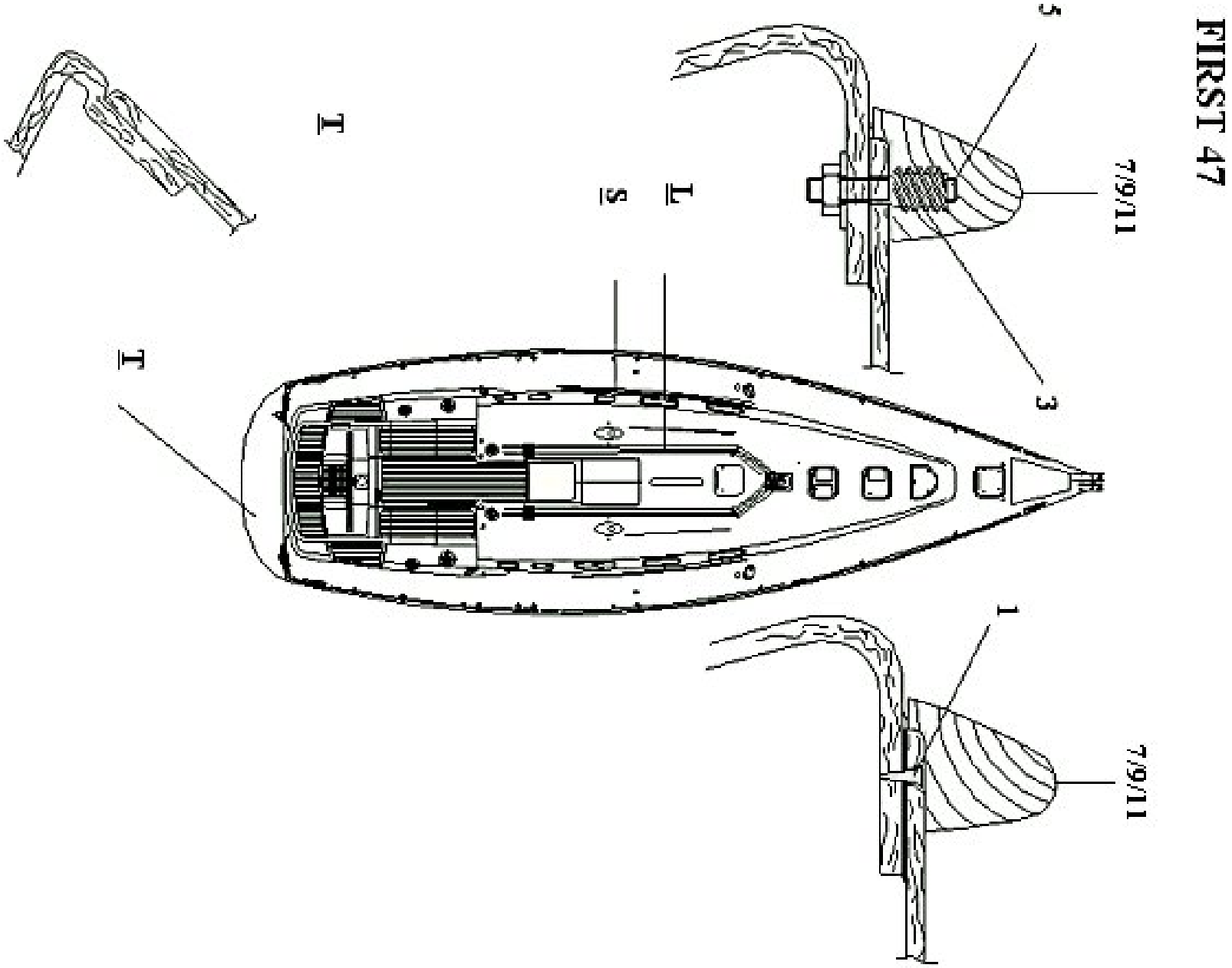

HULL DECK JOINT

option	Pos.	Part No.	Description	Quant. per boat	Version / Option	SS_FAM	Begining hull number	Ending hull number
	1	030663	S S SCREW SHEET METAL A4 PZ 5_5X25_4	50,000				
	3	026493	BRASS INSERT D12 L25 M6 PARTIAL	80,000				
	5	026539	TREADED ROD S S M 6 L 45 (A2)	80,000				
	7	W03176	PART NO LONGER AVAILABLE	2,000				
	9	W03177	PART NO LONGER AVAILABLE	2,000				
	11	W03178	PART NO LONGER AVAILABLE	2,000				