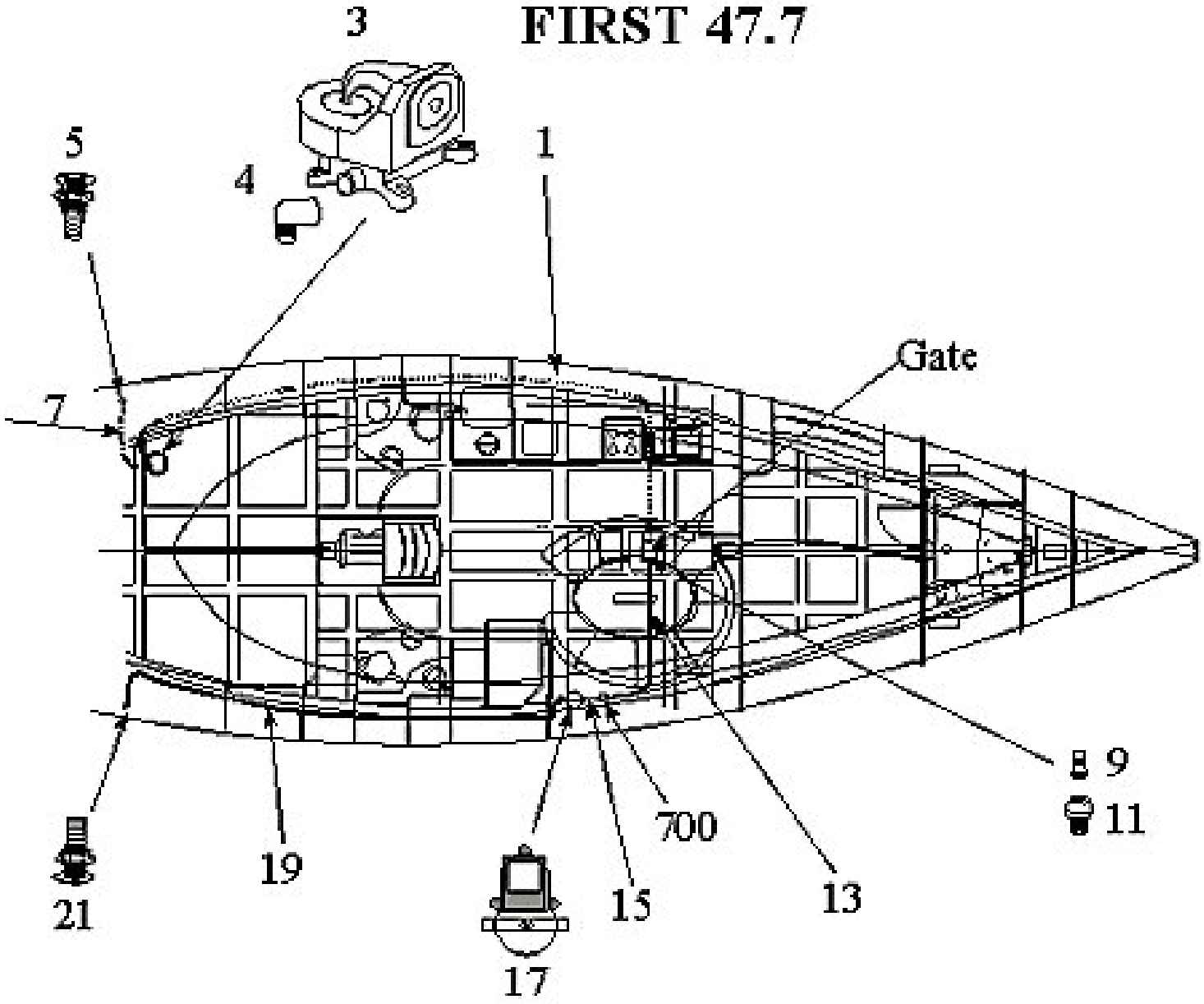
FIRST 47.7
3
5
4
1
Gate
7
9
11
700
19
21
15
13
17

BILGE DRAINING

option	Pos.	Part No.	Description	Quant. per boat	Version / Option	SS_FAM	Begining hull number	Ending hull number
	1	036245	BEN FLEX HOSE D35 L1! NOT AVAILABLE !	1,000				
	3	019178	HAND BILGE PUMP 1WAY+LEV +THRU-BULCK	1,000				
	3	057494	HANDLE MANUAL BILGE PUMP DIA 1RSON	1,000				
	3	148990	HAND BILGE PUMP COVER	1,000				
	3	034069	BILGE PUMP THRU BULKEAD (WHITE)	1,000				
	4	737510	PLASTIC COUPLING 90 ELBOW D38	1,000				
	5	825100	PLASTIC GROOVED SKIN FITTING 33X42	1,000				
	7	019241	BEN FLEX HOSE D35 L ! NOT AVAILABLE !	1,000				
	9	342700	HOSE BARB MALE BRASS 20X27 D19	1,000				
	11	025479	VERTICAL STRAINER VALVE 3 4	1,000				
	13	073338	HOSE RAW WATER ENGIN DIA20 STD G	4,000				
	15	073338	HOSE RAW WATER ENGIN DIA20 STD G	1,000				
	17	041563	BILGE PUMP 12V 13L MN+FILTER ((C E)	1,000				
	19	073338	HOSE RAW WATER ENGIN DIA20 STD G	8,000				
	21	825000	PLASTIC GROOVED SKIN FITTING 20X27	1,000				
	700	406000	PUMP FILTER	1,000				