MOORING ANCHORING

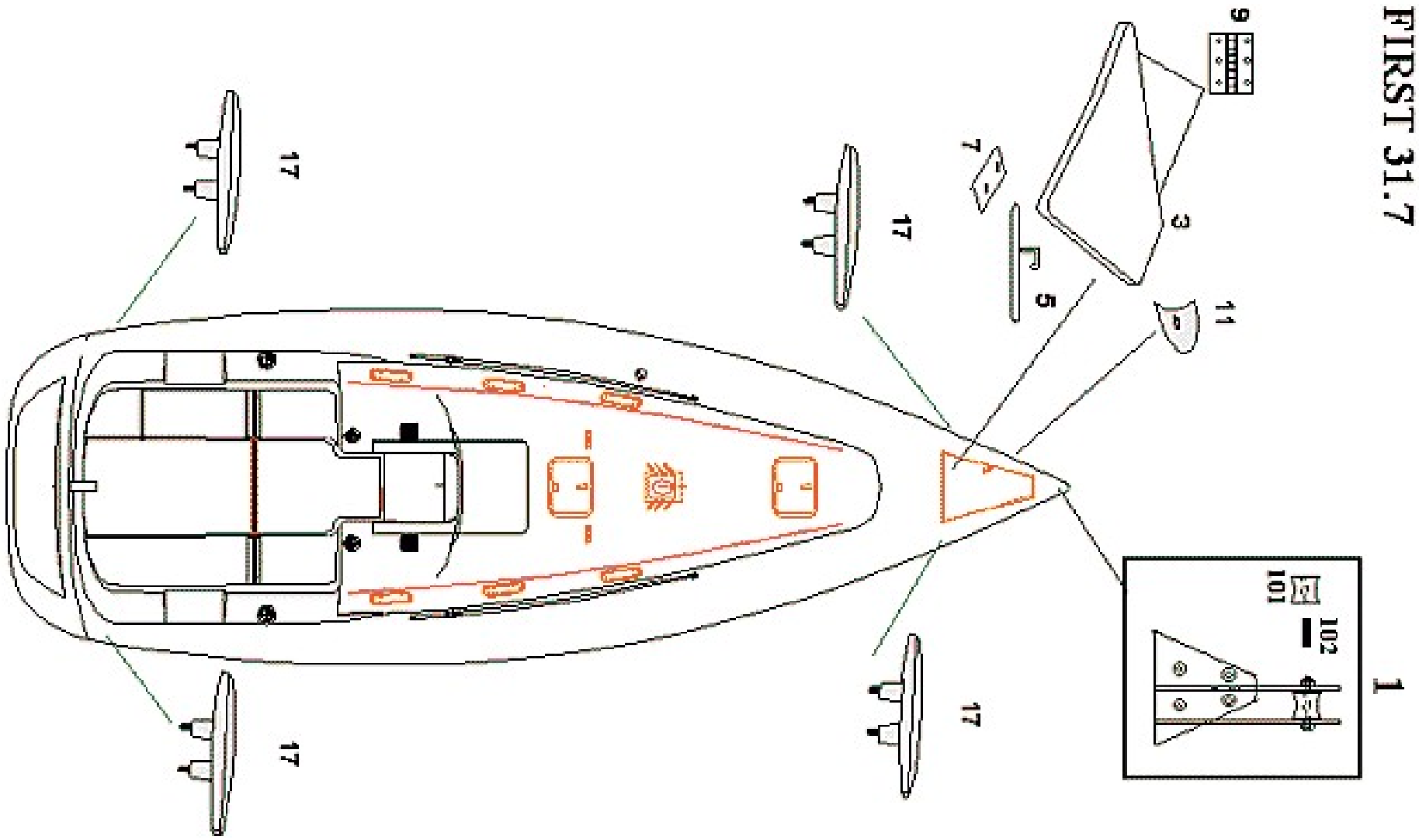

MOORING ANCHORING

option	Pos.	Part No.	Description	Quant. per boat	Version / Option	SS_FAM	Begining hull number	Ending hull number
	1	046877	S S STEM FITTING 18317	1,000				
	3	046472	ANCHOR LOCKER HATCH 18317-570	1,000				
	5	917900	ANCHOR LOCKER COVER LOCK D 8 L 110	1,000				
	7	018708	CURVED S S PROTECT 22X45X1	1,000				
	9	001564	S S HINGE 60X50 THICKNESS 2 D 8 PINS	2,000				
	11	273950	SCUPPER CHAIN LOCKER WHITE UV FILTER	1,000				
	17	025390	MOORING CLEAT L250 ANOD AL AM	2,000				1365
	17	081215	MOORING CLEAT L250 ANOD AL NM	2,000			1365	1402
	17	090634	TAQUET CLASS.ALU.L250 STDG N1	2,000			1403	
	101	756515	STEMHEAD ROLLER D 50X10_5 L50	1,000				
	102	050547	AXLE REA D16 L326AD SHEAVE D18 L50	1,000				