BILGE DRAINING

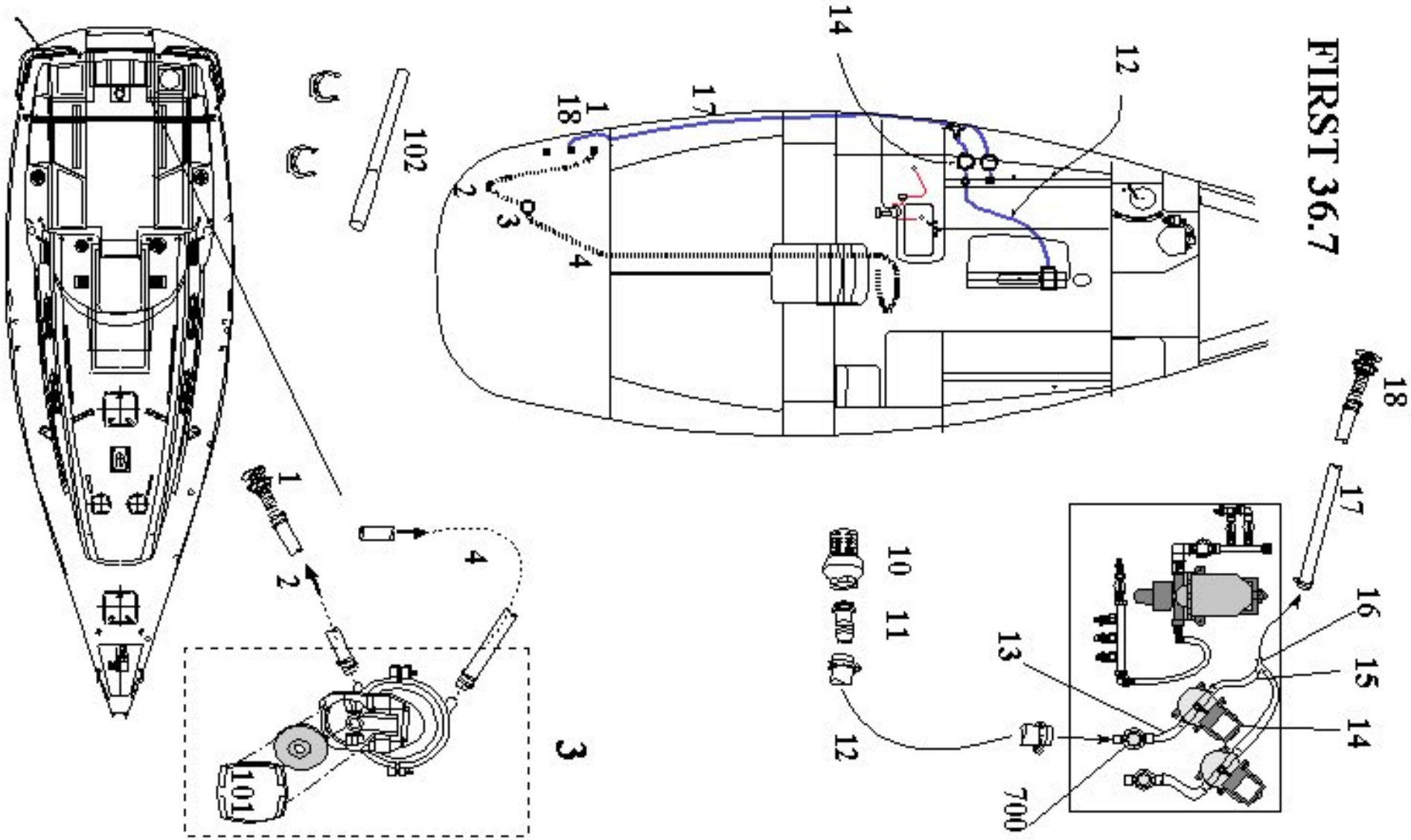

BILGE DRAINING

option	Pos.	Part No.	Description	Quant. per boat	Version / Option	SS_FAM	Begining hull number	Ending hull number
	1	042121	PLASTIC THRU-SKIN 26X34 D25	1,000				
	2	T22130140	HOSE 25 L 1_40 WATER STDG	1,000				
	3	041319	MANUAL BILGE PUMP 1ACTION 0_7L C	1,000				
	3	559110	HANDLE MANUAL BILGE PUMP	1,000				
	3	049824	HAND BILGE PUMP COVER	1,000				
	4	T22130700	HOSE 25 L 7_00 WATER STDG	1,000				1363
	10	025479	VERTICAL STRAINER VALVE 3 4	1,000				
	11	342700	HOSE BARB MALE BRASS 20X27 D19	1,000				
	12	073338	HOSE RAW WATER ENGIN DIA20 STD G	2,000				
	13	073338	HOSE RAW WATER ENGIN DIA20 STD G	1,000				
	14	041563	BILGE PUMP 12V 13L MN+FILTER ((C E)	1,000				521
	14	072880	BILGE PUMP 12V 15L/MN VIKING	1,000			522	
	15	073338	HOSE RAW WATER ENGIN DIA20 STD G	1,000				
	16	746100	PLASTIC GROOVED Y COUPLING 20X20X20	1,000				
	17	073338	HOSE RAW WATER ENGIN DIA20 STD G	5,000				
	18	825000	PLASTIC GROOVED SKIN FITTING 20X27	1,000				
	101	049824	HAND BILGE PUMP COVER	1,000				
	102	559110	HANDLE MANUAL BILGE PUMP	1,000				
	700	406000	PUMP FILTER	1,000				